SP-2 FOUNDATION DRAIN SUMP PUMPS & BASIN

quality . service
innovation . integrity

140 Series

ZOELLER GREEN ®

"The color green is a registered trademark of Zoeller Pump Co."

Features

The "Flow-Mate" series of submersible pumps is designed for use in residential or light commercial dewatering applications and can be used to transfer groundwater or effluent. These durable cast iron pumps include a powder coated epoxy finish to prevent corrosion and are designed to provide great heat dissipation from the motor, ensuring a long service life. As with every Zoeller pump, each one is 100% pressure-tested, submerged and run to ensure quality and reliability for years of trouble-free performance! This attention to detail is an inherent feature of every pump in this series, making it one of the most reliable in the industry.

- Ideal for use in septic systems, low pressure pipe (LPP), and enhanced flow STEP system applications.
- Variable level control systems and containers of various sizes are available for longer cycles.
- Double seal models are available to improve bearing lubrication and prevent leaks and damage to seals or bearings during dry run conditions.
- All models are hermetically sealed to be watertight, dust-tight, and completely submersible.

Reserve Powered Design: For unusual conditions, a reserve safety factor is engineered into the design of every pump.

Specifications

Motor Characteristics

Motor	3/4 - 1 HP
Voltage	115 or 230 V
Phase	1 Ph
Hertz	60 Hz
RPM	3450 RPM
Type	Permanent split capacitor
Insulation	Class B
Amps	6.0 - 13.0 Amps

Pump Characteristics

Operation	Automatic or nonautomatic
Discharge Size	1-1/2" NPT
Solids Handling	140/4140: 1/2" (13 mm), 145/4145: 3/4" (19 mm) spherical solids
Cord Length	20' (6 m) standard
Cord Type	UL listed, neoprene cord with molded plug cap and ground wire
Max Head	50' (15.2 m) or 74' (22.6 m)
Max Flow Rate	86 GPM (326 LPM) or 61 GPM (232 LPM)
Max Operating Temp	130° F (54° C)
Cooling	Oil filled
Motor Protection	Auto reset thermal overload

Materials Characteristics

Cap	Cast iron
Motor Housing	Cast iron
Pump Housing	Cast iron
Base	Cast iron
Upper Bearing	Sleeve bearing
Lower Bearing	Ball bearing
Mechanical Seals	Carbon and ceramic
Impeller Type	Single vane or non-clogging vortex
Impeller	Engineered thermoplastic
Hardware	Stainless steel
Motor Shaft	JIS S45C steel
Gasket	Neoprene

60 Hz

ZOELLER® PUMP COMPANY
Zoeller Family of Water Solutions™

FM1502_Ea

SP-2 FOUNDATION DRAIN SUMP PUMPS & BASIN
140 Series

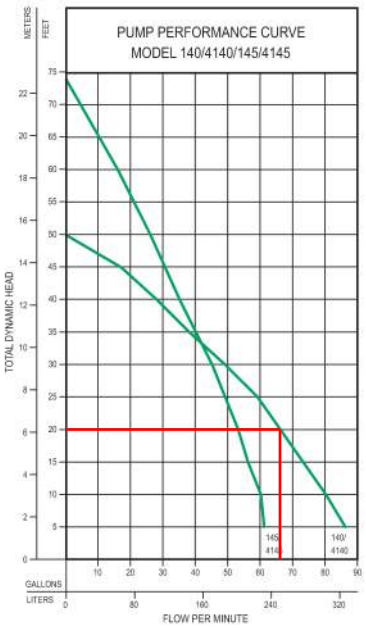

150090

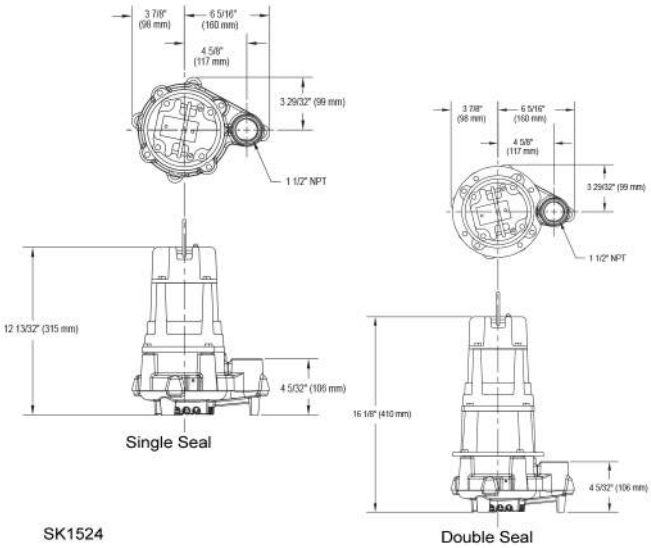

SK1524

Model

Model Number	Seal	Mode	Volts	Phase	Amps	HP	Hz	Lbs	Kg
N140	Single	Non	115	1	12.0	1	60	43	20
E140	Single	Non	230	1	6.0	1	60	44	20
BN140	Single	Auto	115	1	12.0	1	60	44	20
BE140	Single	Auto	230	1	6.0	1	60	46	21
E145	Single	Non	230	1	6.0	3/4	60	46	21
N145	Single	Non	115	1	13.0	3/4	60	54	24
BN145	Single	Auto	115	1	13.0	3/4	60	55	25
N4140	Double	Non	115	1	12.0	1	60	50	23
E4140	Double	Non	230	1	6.0	1	60	51	23
BN4140	Double	Auto	115	1	12.0	1	60	63	29
BE4140	Double	Auto	230	1	6.0	1	60	63	29
N4145	Double	Non	115	1	13.0	3/4	60	63	29
BN4145	Double	Auto	115	1	13.0	3/4	60	63	29

BN and BE models include a 20' (6 m) piggyback variable level pump switch.

Additional cord lengths are available in 15' (5 m), 25' (8 m), 35' (11 m) and 50' (15 m).

Your Peace of Mind is Our Top Priority®
3649 Cane Run Rd | Louisville, KY 40211 USA
+1 502-778-2731 | 1-800-928-7867 | Fax: +1 502-774-3624
www.zoeller.com

Product information presented here reflects conditions at time of publication. Consult factory regarding discrepancies or inconsistencies. Copyright Zoeller Company. All rights reserved.

SP-2 FOUNDATION DRAIN SUMP PUMPS & BASIN

Your Peace of Mind is Our Top Priority®

SECTION: 2.50.210
FM0712
0815
Supersedes
1014

Product information presented here reflects conditions at time of publication. Consult factory regarding discrepancies or inconsistencies.

ZOELLER®
PUMP COMPANY
Zoeller Family of Water Solutions™

MAIL TO: *P.O. BOX 16347 • Louisville, KY 40256-0347*
SHIP TO: *3649 Cane Run Road • Louisville, KY 40211-1961*
(502) 778-2731 • 1 (800) 928-PUMP • FAX (502) 774-3624

visit our web site: www.zoeller.com

DUPLEX CONTROL PANEL RECOMMENDED APPLICATIONS

PUMP					CONTROL PANEL	
MODEL #	VOLT	PHASE	AMPS	HP	NEMA 1	NEMA 4X
N53	115	1	9.7	0.3	10-1039	10-1041
E53	230	1	4.8	0.3	10-0092	10-1043
N55	115	1	9.7	0.3	10-1039	10-1041
E55	230	1	4.8	0.3	10-0092	10-1043
N57	115	1	9.7	0.3	10-1039	10-1041
E57	230	1	4.8	0.3	10-0092	10-1043
N59	115	1	9.7	0.3	10-1039	10-1041
E59	230	1	4.8	0.3	10-0092	10-1043
N98	115	1	9.4	0.5	10-1039	10-1041
E98	230	1	4.7	0.5	10-0092	10-1043
N137	115	1	10.7	0.5	10-1039	10-1041
E137	230	1	5.8	0.5	10-0092	10-1043
F137	230	3	2.6	0.5	10-1106«	10-1106
G137	460	3	1.4	0.5	10-1102«	10-1102
I137	200	1	6.2	0.5	10-0092	10-1043
J137	200	3	2.6	0.5	10-1106«	10-1106
N139	115	1	10.4	0.5	10-1039	10-1041
E139	230	1	5.8	0.5	10-0092	10-1043
F139	230	3	2.6	0.5	10-1106«	10-1106
G139	460	3	1.2	0.5	10-1102«	10-1102
I139	200	1	5.5	0.5	10-0092	10-1043
J139	200	3	2.6	0.5	10-1106«	10-1106
N140	115	1	12.0	1.0	10-0092	10-1044
E140	230	1	6.0	1.0	10-0092	10-1044
N145	115	1	13.0	0.75	10-1039	10-1041
N151	115	1	6.0	0.3	10-0092	10-1043
E151	230	1	3.2	0.3	10-0092	10-1043
N152	115	1	8.5	0.4	10-1039	10-1041
E152	230	1	4.3	0.4	10-0092	10-1043
N153	115	1	10.5	0.5	10-1039	10-1041
E153	230	1	5.3	0.5	10-0092	10-1043
N161	115	1	15.5	0.5	10-1040	10-1042
E161	230	1	7.5	0.5	10-0092	10-1044
F161	230	3	5.2	0.5	10-1108«	10-1108
I161	200	1	8.8	0.5	10-0092	10-1044
J161	200	3	6.4	0.5	10-1110«	10-1110
G161	460	3	2.9	0.5	10-1106«	10-1106
BA161	575	3	2.4	0.5	10-1154«	10-1154
N163	115	1	15.0	0.5	10-1040	10-1042
E163	230	1	7.5	0.5	10-0092	10-1044
F163	230	3	4.8	0.5	10-1108«	10-1108
I163	200	1	8.5	0.5	10-0092	10-1044
J163	200	3	6.0	0.5	10-1110«	10-1110
G163	460	3	2.9	0.5	10-1106«	10-1106
BA163	575	3	2.4	0.5	10-1154«	10-1154
E165	230	1	10.2	1.0	10-0092	10-1044
F165	230	3	7.4	1.0	10-1110«	10-1110
I165	200	1	12.6	1.0	10-0092	10-1044
J165	200	3	7.5	1.0	10-1110«	10-1110
G165	460	3	3.7	1.0	10-1106«	10-1106
BA165	575	3	3.0	1.0	10-1156«	10-1156
E185	230	1	9.8	1.0	10-0092	10-1044
F185	230	3	7.4	1.0	10-1110«	10-1110
I185	200	1	11.5	1.0	10-0092	10-1044
J185	200	3	7.5	1.0	10-1110«	10-1110
G185	460	3	3.7	1.0	10-1106«	10-1106
BA185	575	3	3.3	1.0	10-1156«	10-1156
E186	230	1	13.7	1.5	10-0092	10-1044
F186	230	3	9.2	1.5	10-1110«	10-1110
I186	200	1	17.2	1.5	10-0092	10-1045
J186	200	3	10.3	1.5	10-1111«	10-1111
G186	460	3	4.6	1.5	10-1108«	10-1108
BA186	575	3	3.6	1.5	10-1108«	10-1108

PUMP					CONTROL PANEL	
MODEL #	VOLT	PHASE	AMPS	HP	NEMA 1	NEMA 4X
E188	230	1	14.0	1.5	10-0092	10-1044
F188	230	3	8.9	1.5	10-1110«	10-1110
I188	200	1	16.8	1.5	10-0092	10-1045
J188	200	3	10.3	1.5	10-1111«	10-1111
G188	460	3	4.6	1.5	10-1108«	10-1108
BA188	575	3	3.5	1.5	10-1156«	10-1156
E189	230	1	17.1	2.0	10-0092	10-1045
F189	230	3	11.2	2.0	10-1111«	10-1111
I189	200	1	20.5	2.0	10-0092	10-1046
J189	200	3	13.2	2.0	10-1112«	10-1112
G189	460	3	6.0	2.0	10-1110«	10-1110
BA189	575	3	5.8	2.0	10-1158«	10-1158
E191	230	1	14.5	1.5	10-0092	10-1044
N264	115	1	9.4	0.4	10-1039	10-1044
E264	230	1	4.7	0.4	10-0092	10-1043
N266	115	1	10.4	0.5	10-1039	10-1044
E266	230	1	5.5	0.5	10-0092	10-1043
F266	230	3	2.6	0.5	10-1106«	10-1106
G266	460	3	1.5	0.5	10-1104«	10-1104
J266	200	3	2.6	0.5	10-1106«	10-1106
I266	200	1	6.2	0.5	10-0092	10-1043
N267	115	1	10.4	0.5	10-1039	10-1044
E267	230	1	5.5	0.5	10-0092	10-1043
F267	230	3	2.6	0.5	10-1106«	10-1106
G267	460	3	1.5	0.5	10-1104«	10-1104
J267	200	3	2.6	0.5	10-1106«	10-1106
I267	200	1	6.2	0.5	10-0092	10-1043
N268	115	1	10.4	0.5	10-1039	10-1044
E268	230	1	5.5	0.5	10-0092	10-1043
F268	230	3	2.6	0.5	10-1106«	10-1106
G268	460	3	1.5	0.5	10-1104«	10-1104
J268	200	3	2.6	0.5	10-1106«	10-1106
I268	200	1	6.2	0.5	10-0092	10-1043
N270	115	1	15.0	1.0	10-1040	10-1045
E270	230	1	7.5	1.0	10-0092	10-1044
N282	115	1	10.3	0.5	10-1039	10-1044
E282	230	1	5.0	0.5	10-0092	10-1043
F282	230	3	3.0	0.5	10-1106«	10-1106
I282	200	1	6.1	0.5	10-0092	10-1043
J282	200	3	3.6	0.5	10-1106«	10-1106
G282	460	3	1.7	0.5	10-1104«	10-1104
BA282	575	3	1.4	0.5	10-1152«	10-1152
E284	230	1	8.9	1.0	10-0092	10-1044
F284	230	3	5.0	1.0	10-1108«	10-1108
I284	200	1	9.3	1.0	10-0092	10-1044
J284	200	3	5.5	1.0	10-1108«	10-1108
G284	460	3	2.6	1.0	10-1106«	10-1106
BA284	575	3	2.2	1.0	10-1154«	10-1154
N292	115	1	15.0	0.5	10-1040	10-1045
E292	230	1	7.5	0.5	10-0092	10-1044
I292	200	1	8.8	0.5	10-0092	10-1044
F292	230	3	5.2	0.5	10-1108«	10-1108
J292	200	3	6.4	0.5	10-1110«	10-1110
G292	460	3	2.9	0.5	10-1106«	10-1106
BA292	575	3	2.4	0.5	10-1154«	10-1154
E293	230	1	10.2	1.0	10-0092	10-1044
F293	230	3	7.6	1.0	10-1110«	10-1110
I293	200	1	12.0	1.0	10-0092	10-1044
J293	200	3	8.2	1.0	10-1110«	10-1110
G293	460	3	4.0	1.0	10-1108«	10-1108
BA293	575	3	3.3	1.0	10-1156«	10-1156

© Copyright 2015 Zoeller® Co. All rights reserved.

SP-2 FOUNDATION DRAIN SUMP PUMPS & BASIN

DUPLEX CONTROL PANEL RECOMMENDED APPLICATIONS

PUMP					CONTROL PANEL	
MODEL #	VOLT	PHASE	AMPS	HP	NEMA 1	NEMA 4X
E294	230	1	13.7	1.5	10-0092	10-1044
F294	230	3	9.5	1.5	10-1110«	10-1110
I294	200	1	16.5	1.5	10-0092	10-1045
J294	200	3	10.8	1.5	10-1111«	10-1111
G294	460	3	4.8	1.5	10-1108«	10-1108
BA294	575	3	3.8	1.5	10-1156«	10-1156
E295	230	1	17.1	2.0	10-0092	10-1045
F295	230	3	12.2	2.0	10-1111«	10-1111
I295	200	1	20.5	2.0	10-1046«	10-1046
J295	200	3	14.3	2.0	10-1112«	10-1112
G295	460	3	6.1	2.0	10-1110«	10-1110
BA295	575	3	4.9	2.0	10-1158«	10-1158
E404	230	1	12.9	2.0	10-0092	10-1044
F404	230	3	10.5	2.0	10-1111«	10-1111
I404	200	1	14.4	2.0	10-0092	10-1044
J404	200	3	13.8	2.0	10-1111«	10-1111
G404	460	3	5.2	2.0	10-1108«	10-1108
BA404	575	3	4.1	2.0	10-1158«	10-1158
E405	230	1	19.0	3.0	10-0092	10-1045
F405	230	3	12.2	3.0	10-1111«	10-1111
I405	200	1	20.2	3.0	10-1046«	10-1046
J405	200	3	14.8	3.0	10-1112«	10-1112
G405	460	3	6.1	3.0	10-1110«	10-1110
BA405	575	3	4.8	3.0	10-1158«	10-1158

PUMP					CONTROL PANEL	
MODEL #	VOLT	PHASE	AMPS	HP	NEMA 1	NEMA 4X
E611	230	1	6.9	1.0	10-0925**«	10-0925**
F611	230	3	4.2	1.0	10-1108«	10-1108
G611	460	3	2.1	1.0	10-1104«	10-1104
J611	200	3	4.8	1.0	10-1108«	10-1108
BA611	575	3	1.7	1.0	10-1154«	10-1154
E621	230	1	8.9	1.5	10-0926**«	10-0926**
F621	230	3	5.1	1.5	10-1108«	10-1108
G621	460	3	2.6	1.5	10-1106«	10-1106
J621	200	3	5.9	1.5	10-1110«	10-1110
BA621	575	3	2.0	1.5	10-1154«	10-1154
E631	230	1	14.5	2.0	10-0927**«	10-0927**
F631	230	3	6.8	2.0	10-1110«	10-1110
G631	460	3	3.4	2.0	10-1106«	10-1106
J631	200	3	7.8	2.0	10-1110«	10-1110
BA631	575	3	2.7	2.0	10-1156«	10-1156
E641	230	1	17.0	3.0	10-0928**«	10-0928**
F641	230	3	9.6	3.0	10-1111«	10-1111
G641	460	3	4.8	3.0	10-1108«	10-1108
J641	200	3	11.0	3.0	10-1111«	10-1111
BA641	575	3	3.9	3.0	10-1158«	10-1158
E651	230	1	28.0	5.0	10-0929**«	10-0929**
F651	230	3	15.2	2.0	10-1112«	10-1112
G651	460	3	7.6	5.0	10-1110«	10-1110
J651	200	3	17.5	5.0	10-1114«	10-1114
BA651	575	3	6.1	5.0	10-1158«	10-1158
F661	230	3	22.0	7.5	10-1115«	10-1115
G661	460	3	11.0	7.5	10-1111«	10-1111
J661	200	3	25.3	7.5	10-1183«	10-1183
BA661	575	3	9.0	7.5	10-1160«	10-1160

* Consult Factory
** Control Panels contain special starting components that will only work with the pump specified.
« Some panels listed in the NEMA 1 column are NEMA 4X.

NEMA 1	Indoor
NEMA 4X	Outdoor/Indoor

ZOELLER® PUMP COMPANY

MAIL TO: *P.O. BOX 16347 • Louisville, KY 40256-0347*
SHIP TO: *3649 Cane Run Road • Louisville, KY 40211-1961*
(502) 778-2731 • 1 (800) 928-PUMP • FAX (502) 774-3624

Your Peace of Mind is Our Top Priority®

visit our web site: www.zoeller.com

© Copyright 2015 Zoeller® Co. All rights reserved.

SP-2 FOUNDATION DRAIN SUMP PUMPS & BASIN

Your Peace of Mind is Our Top Priority®

SECTION: 4.10.050
FM0526
0713
Supersedes
1211

Product information presented here reflects conditions at time of publication. Consult factory regarding discrepancies or inconsistencies.

ZOELLER®
PUMP COMPANY
Zoeller Family of Water Solutions™

MAIL TO: P.O. BOX 16347 • Louisville, KY 40256-0347
SHIP TO: 3649 Cane Run Road • Louisville, KY 40211-1961
(502) 778-2731 • 1 (800) 928-PUMP • FAX (502) 774-3624

visit our web site: www.zoeller.com

COMPARE THESE FEATURES

- Float is constructed of durable PVC/polypropylene encasing variable level switch
- Standard mechanical variable level control switches are rated for 115/230V, 5 Amps
- Low current mechanical variable level control switches are rated for 125 VAC/30 VDC, 0.1 Amps
- 18/2 Type SJOW CPE cord standard
- Cords are available in 15-25-35-50 foot lengths
- Temperature rating of 140°F (60°C)
- Approximately 1.5" liquid level differential in switching action

Variable Level Control Switch is normally open when hanging vertically above liquid level. Switch closes when it reaches a few degrees above the horizontal position.

APPLICATIONS

- Switch for simplex or duplex pump control and high level alarm on electrical alternating control panel systems for dewatering, effluent and sewage applications.
- Switch for A-Pak
- High level alarm switch

ADJUSTABLE WEIGHT: (P/N 10-0689) provides an accurate pivot point for suspended float switches.

- Gripper teeth on clip and weight channel securely lock float cable into place.
- Cable weight can be adjusted without the use of tools.

HOUSING: 1lb 12oz. (0.8 kg) 2.8" x 3.3" (7.1 cm x 8.4 cm)
Impact-resistant & non-corrodible, PVC housing for liquids up to 140° F (60° C)
CLIP: injection-molded acetal plastic
WIRE/CABLE ACCOMODATED: SJOW, SJTW, 18/2, 18/3, 16/3, 14/2, 14/3
SHIP WEIGHT: 2 lbs. (32 oz)

VARIABLE LEVEL CONTROL SWITCHES

CLAMP TYPE

ADJUSTABLE WEIGHT TYPE

May not be exactly as pictured. **See back for application drawings.**

FLOAT SWITCHES			
Mechanical		Cord Length	Mounting Method
Standard P/N*	Low Current P/N**		
10-0743	10-2060	15	Clamp
10-0744	10-2061	20	Clamp
10-1877	10-2062	25	Clamp
10-1878	10-2063	35	Clamp
10-1879	10-2064	50	Clamp
10-1880	10-2065	15	Adjustable Weight
10-1881	10-2066	25	Adjustable Weight
10-1882	10-2067	35	Adjustable Weight
10-1883	10-2068	50	Adjustable Weight

FLOAT SWITCH TREES			
Mechanical		Cord Length	Mounting Method
Standard P/N*	Intrinsically Safe P/N**		
10-1456	10-1456	---	Tree Only
10-1886	10-2069	15	(3) 15' Floats & Tree
10-1887	10-2070	15	(4) 15' Floats & Tree

*** Do not use with intrinsically safe control systems.**
**** For use with intrinsically safe control systems only.**

© Copyright 2013 Zoeller Co. All rights reserved.

SP-2 FOUNDATION DRAIN SUMP PUMPS & BASIN

TYPICAL APPLICATIONS

SIMPLEX SYSTEM

Switch for A-Pak, High Level Alarm Switch.

Voltage	A-Pak	Variable Level Control Switch
115V	10-1494	10-0743

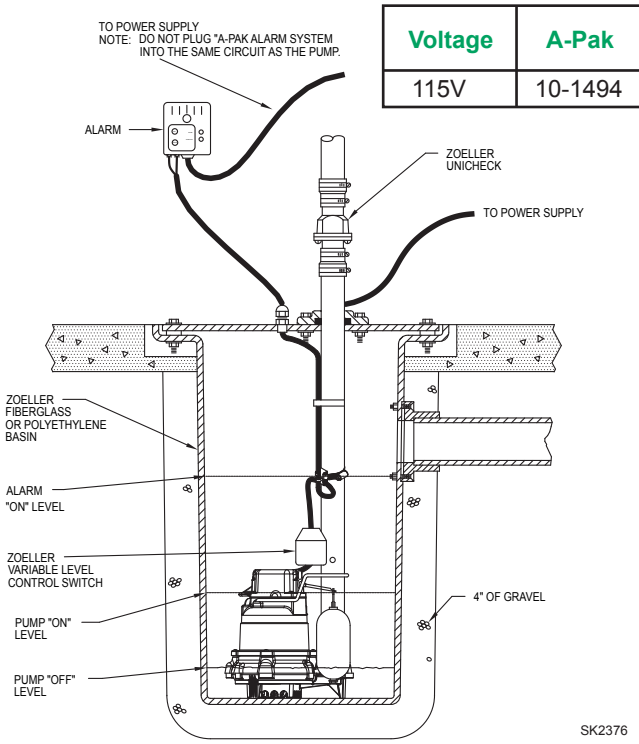

DUPLEX ELECTRICAL ALTERNATING SYSTEM

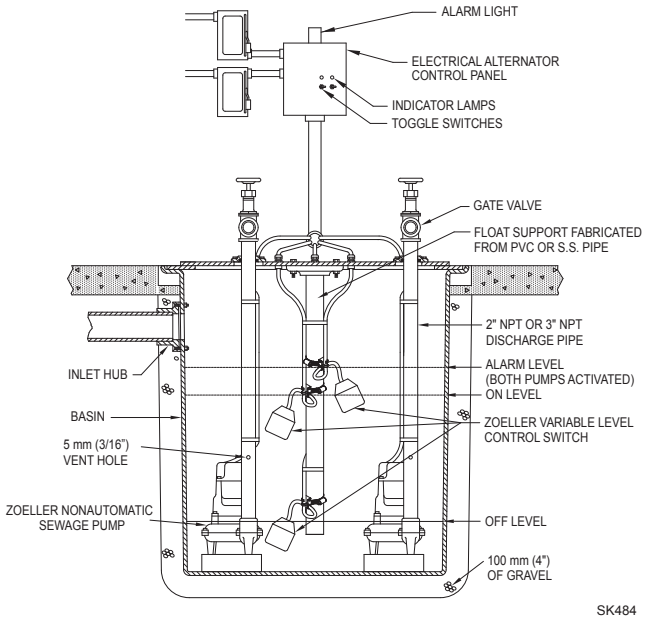

FLOAT TREE ASSEMBLIES

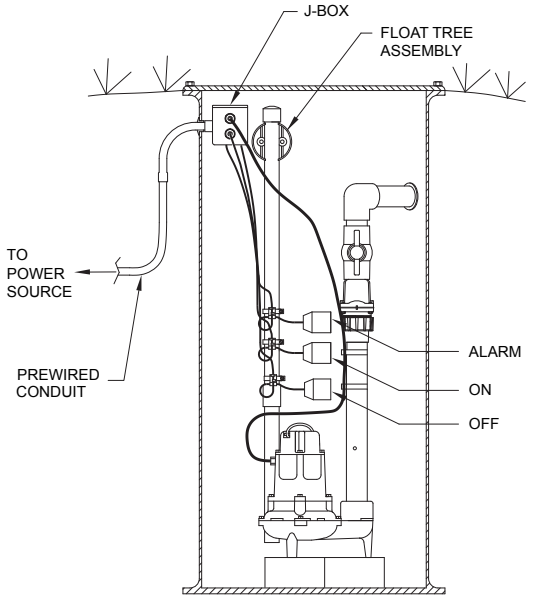

OUTDOOR BASIN

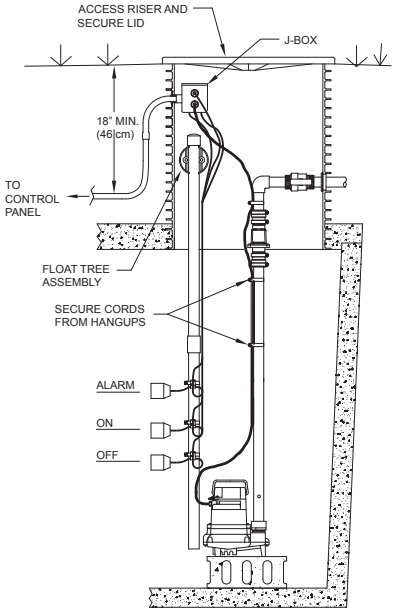

DOSING TANK

For information on additional Zoeller products refer to catalog on Electrical Alternator, FM0486; Single Phase Simplex Control/Alarm Systems, FM0732; and Simplex Controller, FM0731.

WARNING All electrical systems must be installed by a qualified licensed electrician according to the National Electrical Code.

ZOELLER® PUMP COMPANY

MAIL TO: P.O. BOX 16347 • Louisville, KY 40256-0347
SHIP TO: 3649 Cane Run Road • Louisville, KY 40211-1961
(502) 778-2731 • 1 (800) 928-PUMP • FAX (502) 774-3624

Your Peace of Mind is Our Top Priority®

visit our web site: www.zoeller.com

© Copyright 2013 Zoeller Co. All rights reserved.

SP-2 FOUNDATION DRAIN SUMP PUMPS & BASIN

Your Peace of Mind is Our Top Priority®

SECTION: 6.10.090
FM0419
1111/2
Supersedes
1111

Product information presented here reflects conditions at time of publication. Consult factory regarding discrepancies or inconsistencies.

ZOELLER® PUMP COMPANY
Zoeller Family of Water Solutions™

MAIL TO: P.O. BOX 16347 • Louisville, KY 40256-0347
SHIP TO: 3649 Cane Run Road • Louisville, KY 40211-1961
(502) 778-2731 • 1 (800) 928-PUMP • FAX (502) 774-3624

visit our web site: www.zoeller.com

INSTALLATION INSTRUCTIONS FOR VARIABLE LEVEL CONTROL SWITCHES

NOTE: Switch not for use for direct "on/off" pump operation. Must be used with control panel.

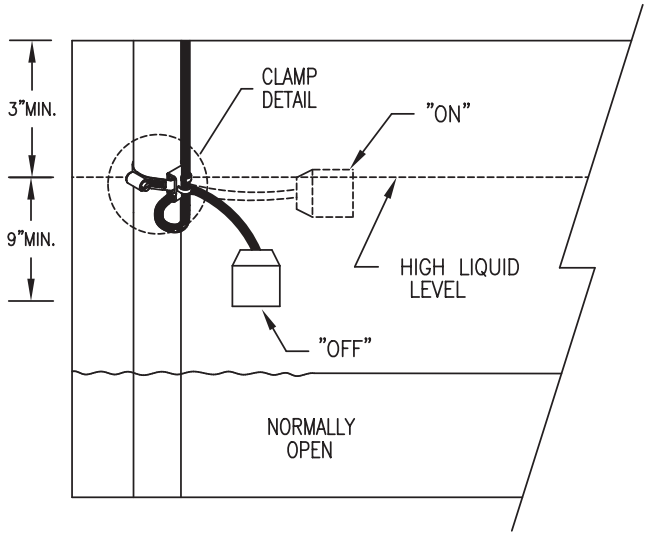

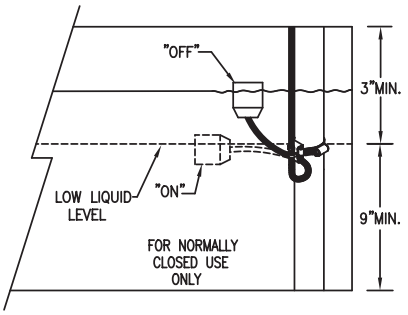

SK1445

⚠ WARNING To avoid electrical shock always disconnect power supply before handling or making adjustments to the variable control switch.

INSTALLATION INSTRUCTIONS

⚠ WARNING

All installation of controls, protection devices and wiring should be done by a qualified licensed electrician. All electrical and safety codes should be followed in addition to the most recent National Electric Code and the Occupational Safety and Health Act (OSHA).

1. Determine your "on" level. (See illustration above) For pump down (NORMALLY OPEN) application: The variable level control switch closes (turns on) when the float tips a few degrees above the horizontal position and opens(turns off) when the float drops a few degrees below the horizontal position. This mode is regularly used on pump applications.

   For normally closed applications only: The variable level control switch closes (turns on) when the float drops a few degrees below the horizontal position and opens (turns off) when the float tips a few degrees above the horizontal position. This mode is used to maintain a specific fluid level in container when pumping from another source. (i.e. stock watering tank)

2. If cable weights are not being used, strap variable level control switch to discharge pipe or similar mounting at determined on-off level. (See sketch #1) NOTE: Do not install cord under hose clamp. NOTE: Be sure float is positioned so that it will not be restricted in its movement by any item in the pit. The strap clamp should be a minimum of 3" from any top restriction (pit cover) or 9" from any bottom restriction (floor, pump, etc.).

3. If cable weights are used, adjust tether as shown in sketch. (See sketch #2)

NOTICE: Do not adjust "OFF" level below discharge on pump.
Use Control Switch in panel controlled pump applications only.

CABLE WEIGHT (See Sketch #2)

1. Lay cable in weight channel.
2. Align clip with weight groove and slide towards cable.
3. Snap clip snugly up to cable, manually moving clip to the tightest possible position.
4. Wire cable leads directly into control device.
5. Suspend unit at desired activation level.

CLAMP DETAIL

(Tether Length non-adjustable)

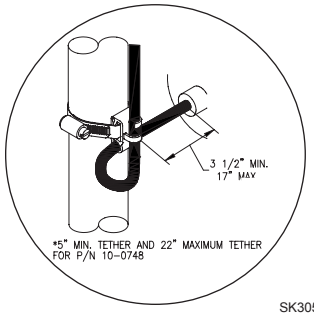

SK305C

SKETCH #1

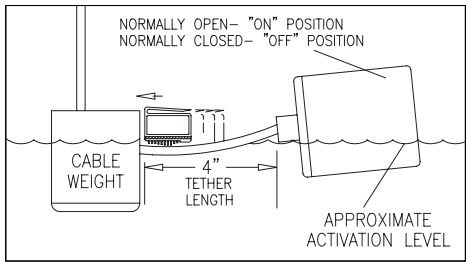

SK1301A

SKETCH #2

P/N 1008711C

© Copyright 2011 Zoeller Co. All rights reserved.

SP-2 FOUNDATION DRAIN SUMP PUMPS & BASIN

Notice to installing contractor: Instructions must remain with installation.

Your Peace of Mind is Our Top Priority®

FM0447
0515
Supersedes
1114

Product information presented here reflects conditions at time of publication. Consult factory regarding discrepancies or inconsistencies.

ZOELLER®
PUMP COMPANY
Zoeller Family of Water Solutions™

MAIL TO: *P.O. BOX 16347 • Louisville, KY 40256-0347*
SHIP TO: *3649 Cane Run Road • Louisville, KY 40211-1961*
(502) 778-2731 • 1 (800) 928-PUMP • FAX (502) 774-3624

visit our web site:
www.zoeller.com

Register your Zoeller Pump Company Product on our website: http://reg.zoellerpumps.com/

INSTALLATION INSTRUCTIONS
RECOMMENDED MODELS

DATE INSTALLED:
MODEL NUMBER:

EFFLUENT*/SUMP/DEWATERING	SEWAGE
55 / 59, 70, 73, 75, 139 Series	211, 212 Series
140 / 4140, 145 / 4145, 160 / 4160 Series	270 / 4270 Series
180 / 4180, 191, 371, 372, 373 Series	280 / 4280, 290 / 4290 Series

NOTICE: VENT HOLE FOR CHECK VALVE SEE #3 IN CAUTION SECTION BELOW AND #4 ON PAGE 3

P/N 006355

* Effluent systems should specify that pumps should not handle solids exceeding 3/4" in order to prevent large solids from entering leeching fields, mound systems, etc. (70 Series have 3/8" solids capability. 50, 140/4140, 371 and 372 Series have ½", 130 Series has 5/8", 145/4145, 160/4160, 180/4180 and 373 models have 3/4".) Where code permits, sewage pumps can be used for effluent systems. Non-automatic pumps with external-level controls are recommended for septic tank effluent applications.

PREINSTALLATION CHECKLIST - ALL INSTALLATIONS

1. Inspect all materials. Occasionally, products are damaged during shipment. If the unit is damaged, contact your dealer before using. **DO NOT** remove the test plugs from the pump.
2. Carefully read the literature provided to familiarize yourself with specific details regarding installation and use. These materials should be retained for future reference.

⚠ WARNING

SEE BELOW FOR LIST OF WARNINGS

1. To reduce the risk of electrical shock, a properly grounded receptacle or control box must be installed in accordance with the governing codes. Never remove ground pin from plug.
2. Make certain that the ground fault interrupter protected receptacle or control box is within the reach of the pump's power supply cord. DO NOT USE AN EXTENSION CORD. Extension cords that are too long or too light do not deliver sufficient voltage to the pump motor, and they could present a safety hazard if the insulation were to become damaged or the connection end were to fall into a damp or wet area.
3. Make sure the pump's electrical supply circuit is equipped with fuses or circuit breakers of proper capacity. A separate branch circuit is recommended, sized according to the local electrical codes for the current shown on the pump name plate.
4. **Testing for ground.** As a safety measure, each electrical outlet should be checked for ground using a circuit analyzer which will indicate if the power, neutral and ground wires are correctly connected to your outlet. If they are not, call a qualified licensed electrician.
5. FOR YOUR PROTECTION, ALWAYS DISCONNECT PUMP FROM ITS POWER SOURCE BEFORE HANDLING. If pump is wired direct, de-energize the circuit at the control box. Wear insulated protective shoes and do not stand in water. Pumps equipped with a 3-prong ground plug are designed to help protect against electrical shock. DO NOT, UNDER ANY CIRCUMSTANCES, REMOVE THE GROUND PIN.
6. Installation and servicing of the pump, electrical circuits and hardware should only be performed by a qualified licensed electrician.
7. **Risk of electrical shock.** Do not remove power supply cord and strain relief or connect conduit directly to the pump. If the supply cable is damaged, it must be replaced by the Manufacturer or an authorized Zoeller Service Station to avoid a hazard.
8. Pump contains oil which becomes pressurized and hot when operating. Allow 2½ hours after disconnecting before attempting service.
9. Pump is not intended for potable water due to possible contamination by oil contained in the pump.
10. **Risk of electric shock.** These pumps have not been investigated for use in swimming pools and marine areas.
11. According to the state of California (Prop. 65), this product contains chemicals known to the state of California to cause cancer and birth defects or other reproductive harm.

⚠ CAUTION

SEE BELOW FOR LIST OF CAUTIONS

1. Check to be sure your power source is capable of handling the voltage requirements of the motor, as indicated on the pump name plate.
2. The installation of variable level float switches is the responsibility of the installing party, and care should be taken that the tethered float switch will not hang up on the pump apparatus or pit peculiarities and is secured so that the pump will shut off. It is recommended to use rigid pipe and fittings and the pit be 18" or larger in diameter.
3. **Vent hole.** It is necessary that all submersible sump, effluent, and sewage pumps capable of handling various sizes of solid waste be of the bottom intake design to reduce clogging and seal failures. If a check valve is incorporated in the installation, a 3/16" vent hole must be drilled in the discharge pipe below the check valve and pit cover to purge the unit of trapped air. Vent hole should be checked periodically for clogging. The vent hole on a High Head application may cause too much turbulence. If you choose not to drill a vent hole, be sure the pump case and impeller is covered with liquid before connecting the pipe to the check valve. NOTE: THE HOLE MUST BE BELOW THE BASIN COVER AND CLEANED PERIODICALLY. Water stream will be visible when pump is operating.
4. Pump should be checked frequently for debris and/or build up which may interfere with the float "on" or "off" position. Repair and service should be performed by an Authorized Zoeller Service Station only.
5. Maximum operating temperature for standard model pumps must not exceed 130°F (54°C). Maximum operating temperatures for 70 series and model 211 must not exceed 110°F (43°C). Maximum operating temperatures for 73, 75, 212 series and model 211 must not exceed 104°F (40°C).
6. Do not operate a pump in an application where the Total Dynamic Head is less than the minimum Total Dynamic Head listed on the Pump Performance Curves.
7. For health reasons, do not unplug, turn off, or disable pump and use pump tank system as a way to fill up a sink or laundry tray, etc.
8. Pumps must be installed in accordance with the National Electrical Code and all applicable local codes and ordinances. Pumps are not to be installed in locations classified as hazardous in accordance with National Electric Code, ANSI, NFPA 70.

NOTE: Pumps with the "UL" mark and pumps with the "US" mark are tested to UL standard UL778. CSA certified pumps are certified to CSA standard C22.2 No. 108.

REFER TO WARRANTY ON PAGE 2.

© Copyright 2015 Zoeller® Co. All rights reserved.

SP-2 FOUNDATION DRAIN SUMP PUMPS & BASIN

LIMITED WARRANTY

Manufacturer warrants, to the purchaser and subsequent owner during the warranty period, every new product to be free from defects in material and workmanship under normal use and service, when properly used and maintained, for a period of one year from date of purchase by the end user, or 18 months from date of original manufacture of the product, whichever comes first. Parts that fail within the warranty period, one year from date of purchase by the end user, or 18 months from the date of original manufacture of the product, whichever comes first, that inspections determine to be defective in material or workmanship, will be repaired, replaced or remanufactured at Manufacturer's option, provided however, that by so doing we will not be obligated to replace an entire assembly, the entire mechanism or the complete unit. No allowance will be made for shipping charges, damages, labor or other charges that may occur due to product failure, repair or replacement.

This warranty does not apply to and there shall be no warranty for any material or product that has been disassembled without prior approval of Manufacturer, subjected to misuse, misapplication, neglect, alteration, accident or uncontrollable act of nature; that has not been installed, operated or maintained in accordance with Manufacturer's installation instructions; that has been exposed to outside substances including but not limited to the following: sand, gravel, cement, mud, tar, hydrocarbons, hydrocarbon derivatives (oil, gasoline, solvents, etc.), or other abrasive or corrosive substances, wash towels or feminine sanitary products, etc. in all pumping applications. The warranty set out in the paragraph above is in lieu of all other warranties expressed or implied; and we do not authorize any representative or other person to assume for us any other liability in connection with our products.

Contact Manufacturer at, 3649 Cane Run Road, Louisville, Kentucky 40211, Attention: Customer Support Department to obtain any needed repair or replacement of part(s) or additional information pertaining to our warranty.

MANUFACTURER EXPRESSLY DISCLAIMS LIABILITY FOR SPECIAL, CONSEQUENTIAL OR INCIDENTAL DAMAGES OR BREACH OF EXPRESSED OR IMPLIED WARRANTY; AND ANY IMPLIED WARRANTY OF FITNESS FOR A PARTICULAR PURPOSE AND OF MERCHANTABILITY SHALL BE LIMITED TO THE DURATION OF THE EXPRESSED WARRANTY.

Some states do not allow limitations on the duration of an implied warranty, so the above limitation may not apply to you. Some states do not allow the exclusion or limitation of incidental or consequential damages, so the above limitation or exclusion may not apply to you.

This warranty gives you specific legal rights and you may also have other rights which vary from state to state.

In those instances where damages are incurred as a result of an alleged pump failure, the Homeowner must retain possession of the pump for investigation purposes.

DO'S & DON'T'S FOR INSTALLING UNIT

1. **DO** read all installation material with the unit.
2. **DO** inspect unit for any visible damage caused by shipping. Contact dealer if unit appears to be damaged.
3. **DO** remove all debris from the basin. Be sure that the pump will have a hard, level surface beneath it. **DO NOT** install on sand, gravel or dirt.
4. **DO** be sure that the area is large enough to allow proper clearance for the level control switch(es) to operate properly.
5. **DO Always Disconnect Pump From Power Source Before Handling**.
   DO always connect to a separately protected and properly grounded circuit.
   DO NOT ever cut, splice, or damage power cord (Only splice in a watertight junction box).
   DO NOT carry or lift pump by its power cord.
   DO NOT use an extension cord.
6. **DO** install a check valve and a union in the discharge line.
   DO NOT use a discharge pipe smaller than the pump discharge.
7. **DO NOT** utilize this unit for pumping gasoline or other hazardous liquids.
8. **DO** test pump immediately after installation to be sure the system is working properly.
9. **DO** review all applicable governing codes and verify that the installation conforms to each of them.
10. **DO** consult manufacturer for clarifications or questions.
11. **DO** consider a two-pump system with an alarm where an installation may become overloaded or primary pump failure would result in property damages.
12. **DO** consider a D.C. Backup System where a sump or dewatering pump is necessary for the prevention of property damages from flooding due to A.C. power disruptions, mechanical or electrical problems or system overloading.
13. **DO** inspect and test system for proper operations at least every 3 months.

SERVICE CHECKLIST

CONDITION	COMMON CAUSES
A. Pump will not start or run.	Check fuse, low voltage, overload open, open or incorrect wiring, open switch, impeller or seal bound mechanically, motor or wiring shorted. Float assembly held down. Switch, damaged or out of adjustment.
B. Motor overheats and trips overload or blows fuse.	Incorrect voltage, negative head (discharge open lower than normal) impeller or seal bound mechanically, motor shorted.
C. Pump starts and stops too often.	Float switch tether length too short, check valve stuck open, or none installed in long distance line, overload open, bidding, sump pit too small.
D. Pump will not shut off.	Debris under float assembly, float bound by basin sides or other, switch, damaged or out of adjustment.
E. Pump operates but delivers little or no water.	Check inlet, strainer housing, discharge pipe, and vent holes for obstructions. Discharge head exceeds pump capacity. Low or incorrect voltage. Incoming water containing air or causing air to enter pumping chamber. Incorrect motor rotation. (3 phase pumps only)
F. Drop in head and/or capacity after a period of use.	Increased pipe friction, clogged line or check valve. Abrasive material and adverse chemicals could possibly deteriorate impeller and pump housing. Check line. Remove base and inspect.
G. Tank or fittings leak.	Carefully tighten pipe joints (use pipe dope) and screws. Check gasket location, tighten lid evenly. Do not over tighten fittings or screws.

If the above checklist does not reveal the problem, consult the Product Support Department. Do not attempt to service or otherwise disassemble pump. Service must be peformed by a Zoeller Authorized Service Station. Visit www.zoeller.com for a complete list of service stations.

© Copyright 2015 Zoeller® Co. All rights reserved.

SP-2 FOUNDATION DRAIN SUMP PUMPS & BASIN

RECOMMENDED INSTALLATION FOR ALL APPLICATIONS

1. Electrical wiring and protection must be in accordance with governing electrical codes.
2. Install proper Zoeller unicheck (combination union and check valve), preferably just above the basin to allow easy removal of the pump for cleaning or repair. If high head or below cover installation is required, use 30-0164 on 1½" pipe, 30-0152 on 2" pipe and 30-0160 on 3" pipe.
3. All installations require a basin cover to prevent debris from falling into the basin and to prevent injury.
4. When a Unicheck is installed, drill a 3/16" diameter hole in the discharge pipe even with the top of the pump. ***NOTE: THE HOLE MUST ALSO BE BELOW THE BASIN COVER AND CLEANED PERIODICALLY.*** (High Head unit see "Caution" on front page). Water stream will be visible from this hole when pump is operating.
5. Securely tape or clamp power cord to discharge pipe, clear of the float mechanism(s).
6. Use a discharge pipe equivalent in diameter to the pump's discharge.
7. Basin must be in accordance with governing codes and specifications.
8. Pump must be level and float mechanism(s) clear of sides of basin before starting pump.
9. Basin must be clean and free of debris after installation.
10. Gate valve, shut-off valve, or ball valve to be supplied by installer and installed according to any and all codes.
11. Locate float switches as shown in sketches. The best place for the "off" point is above the motor housing and positioned 180° from the inlet. Never put "off" point below discharge on pump
12. Gas-tight seals are required to contain gases and odors.
13. Vent gases and odors to the atmosphere through vent pipe.
14. Optional pump stand (P/N 10-2421) eliminates the need for blocks or bricks under the pump. For use with effluent and dewatering pumps only.
15. Optional watertight control box available, see FM1597 for details.
16. For proper spacing of "On" - "Off" switches refer to local or national standards and guidelines.
17. Optional septic tank risers for easy access to pump, controls and filters.

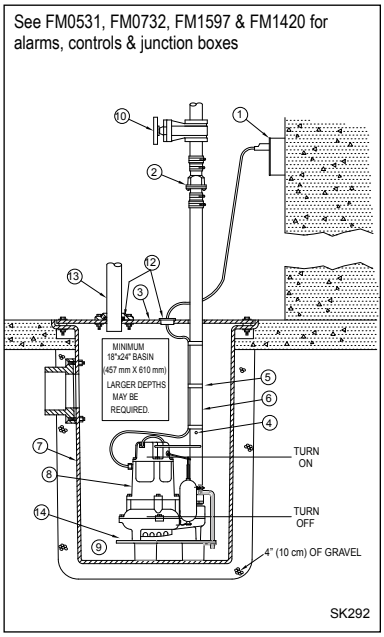

TYPICAL DEWATERING INSTALLATION

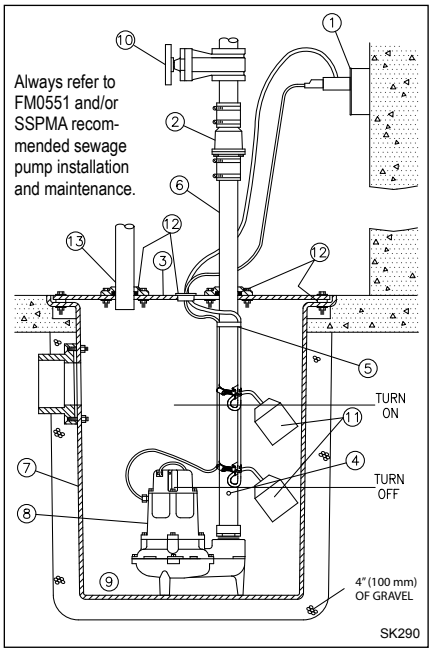

TYPICAL SEWAGE INSTALLATION

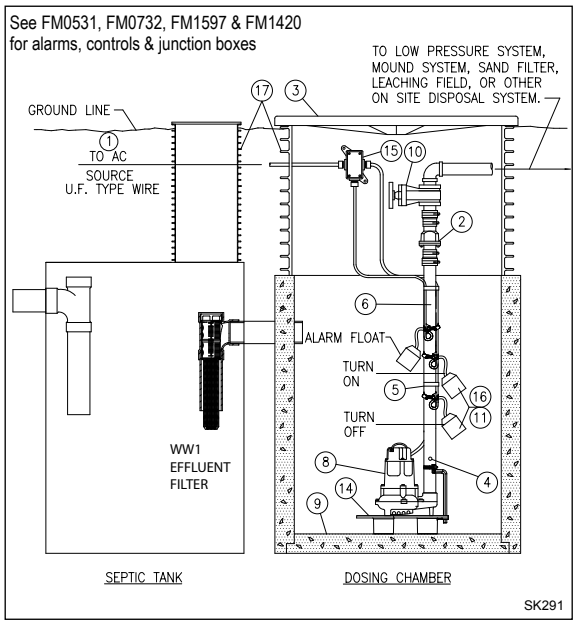

TYPICAL EFFLUENT INSTALLATION

All installations must comply with all applicable electrical and plumbing codes, including, but not limited to, National Electrical Code, local, regional, and/or state plumbing codes, etc. Not intended for use in hazardous locations.

Suggested Methods Of Float Installation

On some installations, it may be desirable to install an independent hanger for the level control switches to avoid possible hang-ups on the pumps, piping, valves, etc. Float hangers are available from Zoeller Company on Catalog Sheet FM0526 or can be fabricated from standard pipe and fittings.

TYPICAL FLOAT HANGER ON STEEL COVER PITS

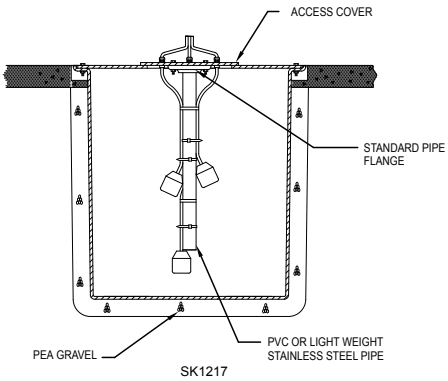

TYPICAL FLOAT HANGER ON CONCRETE PITS OR SEPTIC TANK RISERS

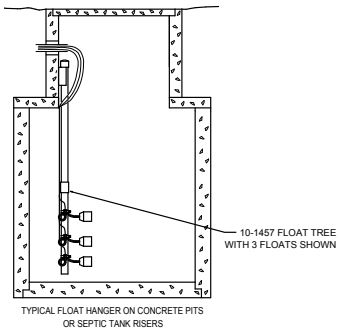

© Copyright 2015 Zoeller® Co. All rights reserved.

SP-2 FOUNDATION DRAIN SUMP PUMPS & BASIN

WD & WH MODEL INSTALLATION

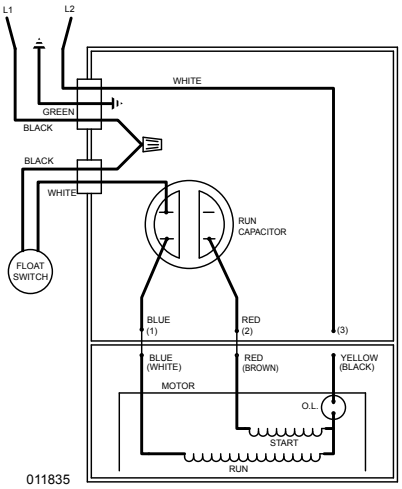

WIRING DIAGRAM FOR MODELS
WD - 230V, 1 Ph, 60 Hz.
WH - 200/208V, 1 Ph, 60 Hz.

Determining Pumping Range in Inches (1 inch = 2.5 cm)

Tether Length	5 min.	10	15	20	22 max.
Pumping Range	9	13.5	18	22	24

Use only as a guide. Due to weight of cable, pumping range above horizontal is not equal to pumping range below horizontal. Ranges are based on testing in nonturbulent conditions. Range may vary due to water temperature and cord shape. As tether length increases, so does the variance of the pumping range.

Models WD & WH are fully automatic. A float switch is included and factory-wired in the pump circuit to provide automatic operation once the float switch is secured properly to the outlet pipe. Use the diagram above to secure the float switch properly and obtain the proper tether to customize the on-off cycle to each application.

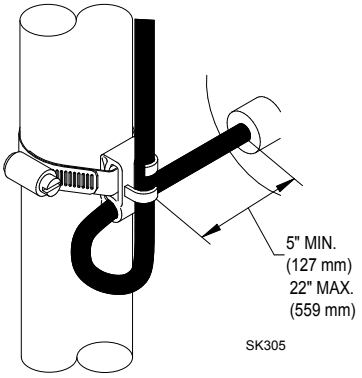

20 AMP SWITCH (WD & WH MODELS)

Note: Failure to keep within proper tether limits may prevent reliable switch operation.

Note: Cable must be mounted in horizontal position.

SINGLE PHASE WIRING INSTRUCTIONS

WARNING **FOR YOUR PROTECTION, ALWAYS DISCONNECT PUMP FROM ITS POWER SOURCE BEFORE HANDLING**. Single phase pumps are supplied with a 3-prong grounded plug to help protect you against the possibility of electrical shock. **DO NOT UNDER ANY CIRCUMSTANCES REMOVE THE GROUND PIN.** The 3-prong plug **must** be inserted into a mating 3-prong grounded receptacle. **If** the installation does not have such a receptacle, it must be changed to the proper type, wired and grounded in accordance with the National Electrical Code and all applicable local codes and ordinances.

WARNING **Risk of electrical shock.** Do not remove power supply cord and strain relief or connect conduit directly to the pump.

WARNING Installation and checking of electrical circuits and hardware should be performed by a qualified licensed electrician.

WARNING Units supplied without a plug (single and three phase) and single phase nonautomatic units with a 20 amp plug must have a motor control and liquid level control provided at time of installation. The control device should have suitable voltage, ampere, frequency, grounding and horsepower rating for the pump to which it is connected.

THREE PHASE WIRING INSTRUCTIONS

WARNING **FOR YOUR PROTECTION, ALWAYS DISCONNECT PUMP FROM ITS POWER SOURCE BEFORE HANDLING**.

To automatically operate a nonautomatic three phase pump, a control panel is required. Follow the instructions provided with the panel to wire the system. For automatic three phase pumps, see automatic 3 phase wiring diagram located to the far right.

Before installing a pump, check the pump rotation to ensure that wiring has been connected properly to power source, and that the green lead of power cord (see wiring diagram) is connected to a valid ground. Momentarily energize the pump, observing the directions of kick back due to starting torque. Rotation is correct if kick back is in the opposite direction of rotation arrow on the pump casing. If rotation is not correct, switching of any two power leads other than ground, should provide the proper rotation.

All three phase pumps require motor starting devices with motor overload protection. See FM0486 for duplex installations. Pumps **must** be installed in accordance with the National Electrical Code and all applicable local codes and ordinances. Pumps are not to be installed in locations classified as hazardous in accordance with National Electrical Code, ANSI/NFPA 70.

NONAUTOMATIC 3 PHASE

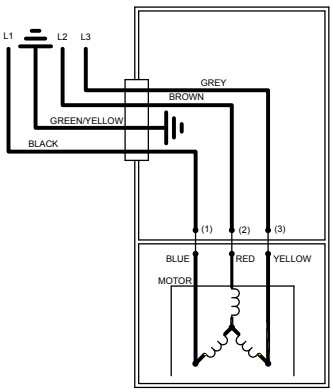

AUTOMATIC 3 PHASE

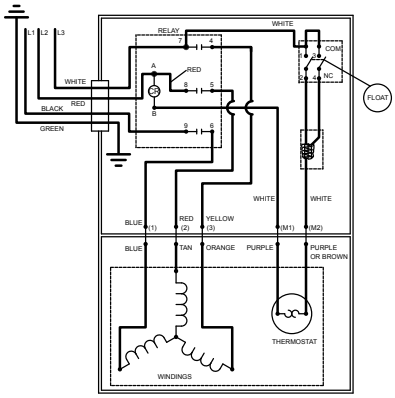

IMPORTANT NOTICE: Some insurance policies, both commercial and residential, extend coverage for damages incurred by product failure. You will need to have possession of the product to support your claim in most cases. Zoeller Pump Co. will exchange the unit or refund the original purchase price once the claim is settled with the insurer in the case where you need to retain possession of the product to support a damage claim you submit to your insurance company.

© Copyright 2015 Zoeller® Co. All rights reserved.